Lab – Troubleshooting Inter-VLAN Routing

Topology

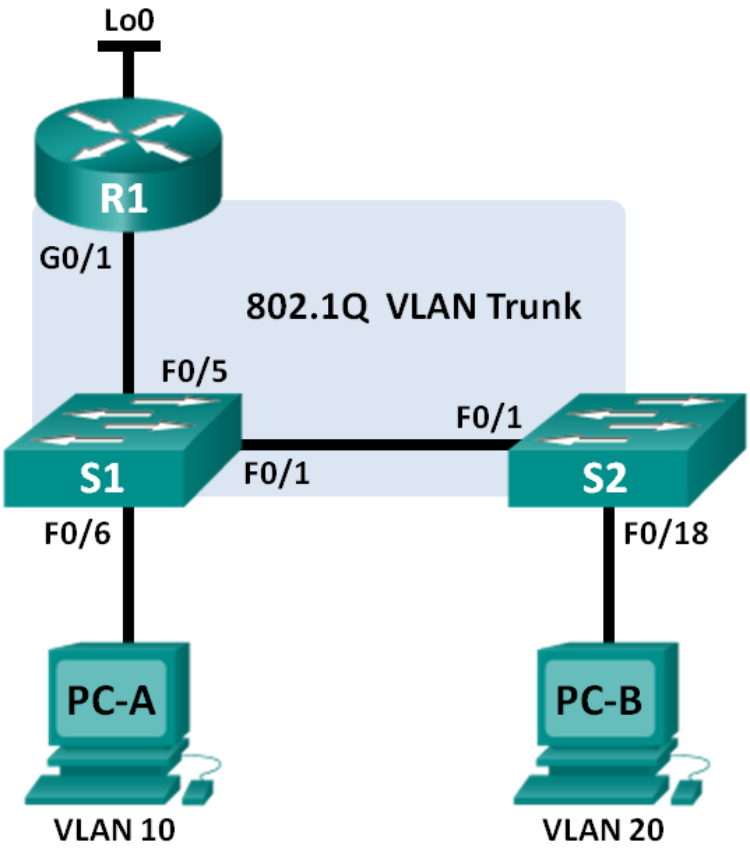

© 2013 Cisco and/or its affiliates. All rights reserved. This document is Cisco Public.

Addressing Table

Device	Interface	IP Address	Subnet Mask	Default Gateway
R1	G0/1.1	192.168.1.1	255.255.255.0	N/A
	G0/1.10	192.168.10.1	255.255.255.0	N/A
	G0/1.20	192.168.20.1	255.255.255.0	N/A
	Lo0	209.165.200.225	255.255.255.224	N/A
S1	VLAN 1	192.168.1.11	255.255.255.0	192.168.1.1
S2	VLAN 1	192.168.1.12	255.255.255.0	192.168.1.1
PC-A	NIC	192.168.10.3	255.255.255.0	192.168.10.1
PC-B	NIC	192.168.20.3	255.255.255.0	192.168.20.1

Switch Port Assignment Specifications

Ports	Assignment	Network
S1 F0/1	802.1Q Trunk	N/A
S2 F0/1	802.1Q Trunk	N/A
S1 F0/5	802.1Q Trunk	N/A
S1 F0/6	VLAN 10 – R&D	192.168.10.0/24
S2 F0/18	VLAN 20 – Engineering	192.168.20.0/24

Objectives

Part 1: Build the Network and Load Device Configurations

Part 2: Troubleshoot the Inter-VLAN Routing Configuration

Part 3: Verify VLAN Configuration, Port Assignment, and Trunking

Part 4: Test Layer 3 Connectivity

Background / Scenario

The network has been designed and configured to support three VLANs. Inter-VLAN routing is provided by an external router using an 802.1Q trunk, also known as router-on-a-stick. Routing to a remote web server, which is simulated by Lo0, is also provided by R1. However, it is not working as designed, and user complaints have not given much insight into the source of the problems.

In this lab, you must first define what is not working as expected, and then analyze the existing configurations to determine and correct the source of the problems. This lab is complete when you can demonstrate IP connectivity between each of the user VLANs and the external web server network, and between the switch management VLAN and the web server network.

Note: The routers used with CCNA hands-on labs are Cisco 1941 Integrated Services Routers (ISRs) with Cisco IOS Release 15.2(4)M3 (universalk9 image). The switches used are Cisco Catalyst 2960s with Cisco IOS Release 15.0(2) (lanbasek9 image). Other routers, switches, and Cisco IOS versions can be used. Depending on the model and Cisco IOS version, the commands available and output produced might vary

© 2013 Cisco and/or its affiliates. All rights reserved. This document is Cisco Public.

from what is shown in the labs. Refer to the Router Interface Summary Table at the end of this lab for the correct interface identifiers.

Note: Make sure that the routers and switches have been erased and have no startup configurations. If you are unsure, contact your instructor.

Required Resources

- 1 Router (Cisco 1941 with Cisco IOS Release 15.2(4)M3 universal image or comparable)
- 2 Switches (Cisco 2960 with Cisco IOS Release 15.0(2) lanbasek9 image or comparable)
- 2 PCs (Windows 7, Vista, or XP with terminal emulation program, such as Tera Term)
- Console cables to configure the Cisco IOS devices via the console ports
- Ethernet cables as shown in the topology

Part 1: Build the Network and Load Device Configurations

In Part 1, you will set up the network topology and configure basic settings on the PC hosts, switches, and router.

Step 1: Cable the network as shown in the topology.

Step 2: Configure PC hosts.

Refer to the Addressing Table for PC host address information.

Step 3: Load router and switch configurations.

Load the following configurations into the appropriate router or switch. All devices have the same passwords; the enable password is **class**, and the line password is **cisco**.

Router R1 Configuration:

```
hostname R1
enable secret class
no ip domain lookup
line con 0
 password cisco
 login
 logging synchronous
line vty 0 4
 password cisco
 login
interface loopback0
 ip address 209.165.200.225 255.255.255.224
interface gigabitEthernet0/1
 no ip address
interface gigabitEthernet0/1.1
 encapsulation dot1q 11
 ip address 192.168.1.1 255.255.255.0
interface gigabitEthernet0/1.10
 encapsulation dot1q 10
```

© 2013 Cisco and/or its affiliates. All rights reserved. This document is Cisco Public.

```
 ip address 192.168.11.1 255.255.255.0
interface gigabitEthernet0/1.20
 encapsulation dot1q 20
 ip address 192.168.20.1 255.255.255.0
end
```

Switch S1 Configuration:

```
hostname S1
enable secret class
no ip domain-lookup
line con 0
 password cisco
 login
 logging synchronous
line vty 0 15
 password cisco
 login
vlan 10
 name R&D
 exit
interface fastethernet0/1
 switchport mode access
interface fastethernet0/5
 switchport mode trunk
interface vlan1
 ip address 192.168.1.11 255.255.255.0
ip default-gateway 192.168.1.1
end
```

Switch S2 Configuration:

```
hostname S2
enable secret class
no ip domain-lookup
line con 0
 password cisco
 login
 logging synchronous
line vty 0 15
 password cisco
 login
vlan 20
 name Engineering
 exit
interface fastethernet0/1
 switchport mode trunk
interface fastethernet0/18
```

© 2013 Cisco and/or its affiliates. All rights reserved. This document is Cisco Public.

```
 switchport access vlan 10
 switchport mode access
interface vlan1
 ip address 192.168.1.12 255.255.255.0
ip default-gateway 192.168.1.1
end
```

Step 4: Save the running configuration to the startup configuration.

Part 2: Troubleshoot the Inter-VLAN Routing Configuration

In Part 2, you will verify the inter-VLAN routing configuration.

a. On R1, enter the **show ip route** command to view the routing table.

Which networks are listed? 209.165.200.224/27 and 209.165.200.225/32

Are there any networks missing in the routing table? If so, which networks?
192.168.1.0/24, 192.168.10.0/24, 192.168.20.0/24

What is one possible reason that a route would be missing from the routing table?
Interfaces are administratively down

b. On R1, issue the **show ip interface brief** command.

Based on the output, are there any interface issues on the router? If so, what commands would resolve the issues?

All Gig interfaces and subinterfaces are down
G0/1.10 is missing its IP address
Command to handle issues.
interface g0/1
no shutdown
exit
interface g0/1.10

c. On R1, re-issue the **show ip route** command.

Verify that all networks are available in the routing table. If not, continue to troubleshoot until all networks are present.

Part 3: Verify VLAN Configuration, Port Assignment, and Trunking

In Part 3, you will verify that the correct VLANs exist on both S1 and S2 and that trunking is configured correctly.

Step 1: Verify VLAN configuration and port assignments.

a. On S1, enter the **show vlan brief** command to view the VLAN database.

Which VLANs are listed? Ignore VLANs 1002 to 1005.
VLAN 1, VLAN 10

Are there any VLANs numbers or names missing in the output? If so, list them.

Are the access ports assigned to the correct VLANs? If not, list the missing or incorrect assignments.
VLAN 10 is assigned wrong with Fa0/18, it must be VLAN 20

© 2013 Cisco and/or its affiliates. All rights reserved. This document is Cisco Public.

If required, what commands would resolve the VLAN issues?

interface fa0/18
switchport access vlan 20
switchport mode access

b. On S1, re-issue the **show vlan brief** command to verify configuration.

c. On S2, enter the **show vlan brief** command to view the VLAN database.

Which VLANs are listed? Ignore VLANs 1002 to 1005.

VLAN 1, VLAN 10, VLAN 20

Are there any VLANs numbers or names missing in the output? If so, list them.

Are the access ports assigned to the correct VLANs? If not, list the missing or incorrect assignments.

Yes the port Fa0/18 is correctly assigned to VLAN 20

If required, what commands would resolve the VLAN issues?

d. On S2, re-issue the **show vlan brief** command to verify any configuration changes.

Step 2: Verify trunking interfaces.

a. On S1, enter the **show interface trunk** command to view the trunking interfaces.

Which ports are in trunking mode? Fa0/5

Are there any ports missing in the output? If so, list them. Fa0/1

If required, what commands would resolve the port trunking issues?

interface fa0/1
switchport mode trunk

b. On S1, re-issue the **show interface trunk** command to verify any configuration changes.

c. On S2, enter the **show interface trunk** command to view the trunking interfaces.

Which ports are in trunking mode? Fa0/1

Are there any ports missing in the output? If so, list them.

If required, what commands would resolve the port trunking issues?

© 2013 Cisco and/or its affiliates. All rights reserved. This document is Cisco Public.

Part 4: Test Layer 3 Connectivity

a. Now that you have corrected multiple configuration issues, let's test connectivity.

From PC-A, is it possible to ping the default gateway for VLAN 10? Yes

From PC-A, is it possible to ping PC-B? No

From PC-A, is it possible to ping Lo0? Yes

If the answer is **no** to any of these questions, troubleshoot the configurations and correct the error.

Note: It may be necessary to disable the PC firewall for pings between PCs to be successful.

From PC-A, is it possible to ping S1? Yes

From PC-A, is it possible to ping S2? Yes

List some of the issues that could still be preventing successful pings to the switches.

This was caused by missing VLAN 20 on Switch S1. Once VLAN 20 was created on S1, the trunk link between switches allowed proper inter-VLAN routing.

b. One way to help resolve where the error is occurring is to do a **tracert** from PC-A to S1.

```
C:\Users\User1> tracert 192.168.1.11
Tracing route to 192.168.1.11 over a maximum of 30 hops
  1    <1 ms    <1 ms    <1 ms  192.168.10.1
  2     *        *        *     Request timed out.
  3     *        *        *     Request timed out.
<output omitted>
```

This output shows that the request from PC-A is reaching the default gateway on R1 g0/1.10, but the packet stops at the router.

c. You have already verified the routing table entries for R1, now execute the **show run | section interface** command to verify VLAN configuration. List any configuration errors.

Incorrect IP address on subinterface G0/1.10
Shutdown state on G0/1 and subinterfaces

What commands would resolve any issues found?

R1(config)# interface g0/1.10
R1(config-subif)# ip address 192.168.10.1 255.255.255.0
R1(config-subif)# no shutdown

d. Verify that that pings from PC-A now reach both S1 and S2.

From PC-A, is it possible to ping S1? Success

From PC-A, is it possible to ping S2? Success

Reflection

What are the advantages of viewing the routing table for troubleshooting purposes?

Examining the routing table helped to quickly determine which networks the router can access and cannot. In this test, it helped me discover that some interfaces were disabled or misconfigured. Fixing the IPs and activating VLANs allowed all the devices to communicate. Using routing utilities helped to troubleshoot issues easily and effectively.

© 2013 Cisco and/or its affiliates. All rights reserved. This document is Cisco Public.

Router Interface Summary Table

Router Interface Summary				
Router Model	**Ethernet Interface #1**	**Ethernet Interface #2**	**Serial Interface #1**	**Serial Interface #2**
1800	Fast Ethernet 0/0 (F0/0)	Fast Ethernet 0/1 (F0/1)	Serial 0/0/0 (S0/0/0)	Serial 0/0/1 (S0/0/1)
1900	Gigabit Ethernet 0/0 (G0/0)	Gigabit Ethernet 0/1 (G0/1)	Serial 0/0/0 (S0/0/0)	Serial 0/0/1 (S0/0/1)
2801	Fast Ethernet 0/0 (F0/0)	Fast Ethernet 0/1 (F0/1)	Serial 0/1/0 (S0/1/0)	Serial 0/1/1 (S0/1/1)
2811	Fast Ethernet 0/0 (F0/0)	Fast Ethernet 0/1 (F0/1)	Serial 0/0/0 (S0/0/0)	Serial 0/0/1 (S0/0/1)
2900	Gigabit Ethernet 0/0 (G0/0)	Gigabit Ethernet 0/1 (G0/1)	Serial 0/0/0 (S0/0/0)	Serial 0/0/1 (S0/0/1)
Note: To find out how the router is configured, look at the interfaces to identify the type of router and how many interfaces the router has. There is no way to effectively list all the combinations of configurations for each router class. This table includes identifiers for the possible combinations of Ethernet and Serial interfaces in the device. The table does not include any other type of interface, even though a specific router may contain one. An example of this might be an ISDN BRI interface. The string in parenthesis is the legal abbreviation that can be used in Cisco IOS commands to represent the interface.				

© 2013 Cisco and/or its affiliates. All rights reserved. This document is Cisco Public.